Číslo typu CF101D CORDLESS FAN

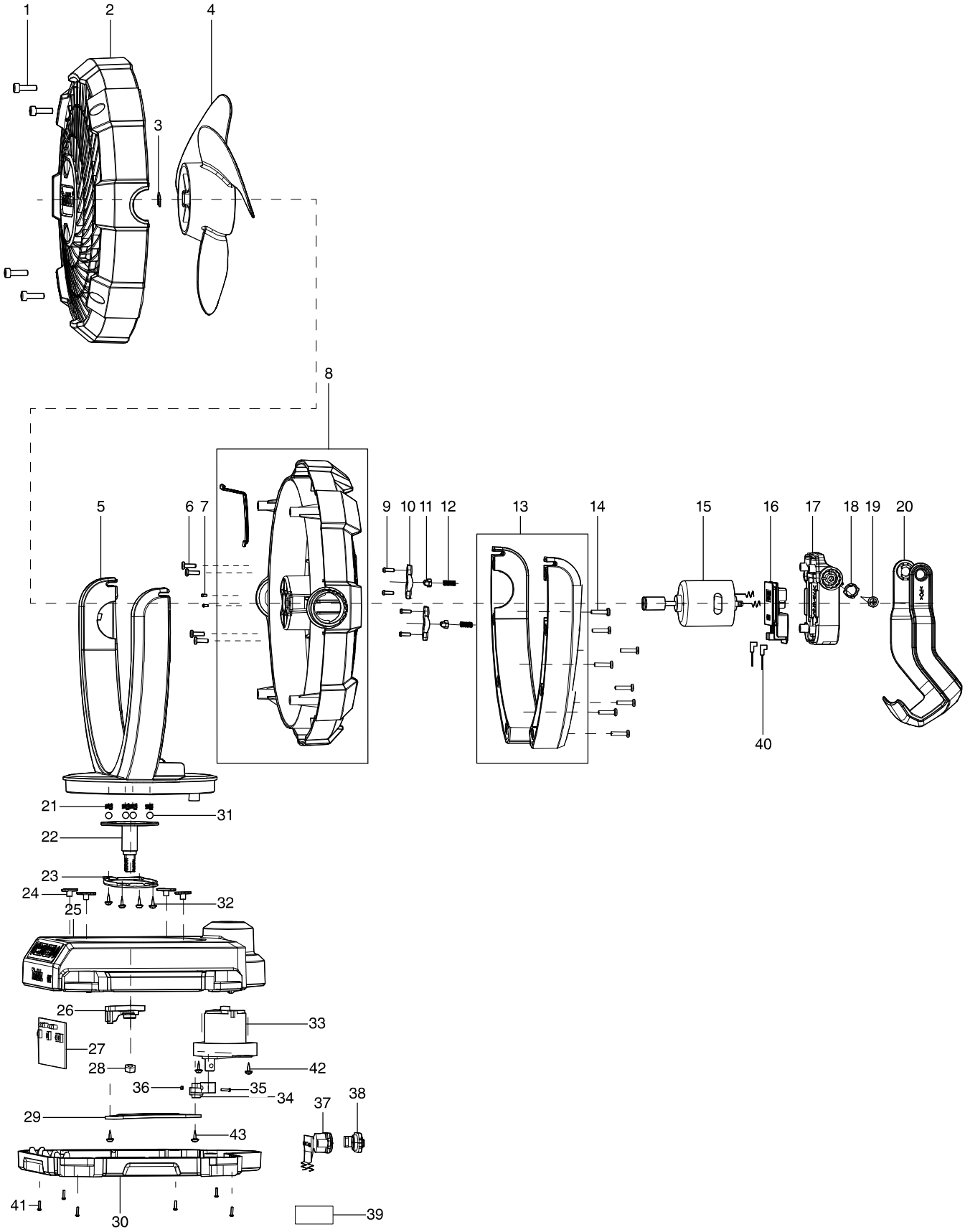

Číslo typu CF101D CORDLESS FAN

Položka	Číslo dílu	Popis	Změn	Množst	N/O	Možnost 1	Možnost 2	Poznámka
001	TE00000201	HEX TAPPING SCREW 4X14		4				
002	TE00000248	FRONT COVER OF THE BODY		1				
003	TE00000199	CIRCLIP		1				
004	TE00000186	FAN BLADE		1				
005	TE00000249	FRONT COVER OF THE STAND		1				
006	TE00000202	SCREW 3X10		4				
007	TE00000206	P.H. SCREW M3X5		2				
008	TE00000250	BACK COVER OF THE BODY		1				
009	TE00000203	SELF-TAPPING SCREW 2.5X8		4				
010	TE00000189	STOPPER SUPPORT		2				
011	TE00000190	STOPPER		2				
012	TE00000197	SPRING1		2				
013	TE00000251	BACK COVER OF THE SUPPORT		1				
014	TE00000204	SCREW 3X14		8				
015	TE00000262	MOTOR AND LEAD		1				
016	644813-5	TERMINAL		1				
017	TE00000179	THE BATTERY HOUSING		1				
018	TE00000191	STOPPER FOR HOOK AND HANDLE		2				
019	TE00000205	CROSS BELT PAD SCREWS 4X10		2				
020	TE00000185	HOOK AND HANDLE		1				
021	TE00000252	SPRING(LARGE)		4				
022	TE00000271	PRINCIPAL AXIS		1				
023	TE00000272	PRESSING/FIXING PART(FOR PRINC		1				
024	TE00000089	POM PLATE		4				
025	TE00000253	UP COVER OF THE BASE		1				
026	TE00000274	SHAKE HEAD-POM 1		1				
027	TE00000254	PCBA		1				
028	TE00000276	NUT M8		1				
029	TE00000277	SHAKE HEAD -CONNECTION IRON		1				
030	TE00000255	LOWER COVER OF THE BASE		1				
031	TE00000063	STEEL BALL 6		4				
032	TE00000256	TAPPING SCREW 3X8		4				
033	TE00000280	SUB MOTOR		1				
034	TE00000282	SHAKE HEAD-POM 2		1				
035	TE00000102	PHILLIPS HEAD SCREW M3X14		1				
036	TE00000281	NUT M3		1				
037	TE00000283	FIXED PART OF DC BASE		1				
038	TE00000192	CHARGING SOCKET PLUG		1				
039	TE00000288	RAITING LABEL		1				
040	TE00000284	LEAD WITH INSERTING PIECE		2				
041	TE00000204	SCREW 3X14		6				
042	TE00000256	TAPPING SCREW 3X8		2				
043	TE00000256	TAPPING SCREW 3X8		2				