Číslo typu CP100D CORDLESS MULTI CUTTER

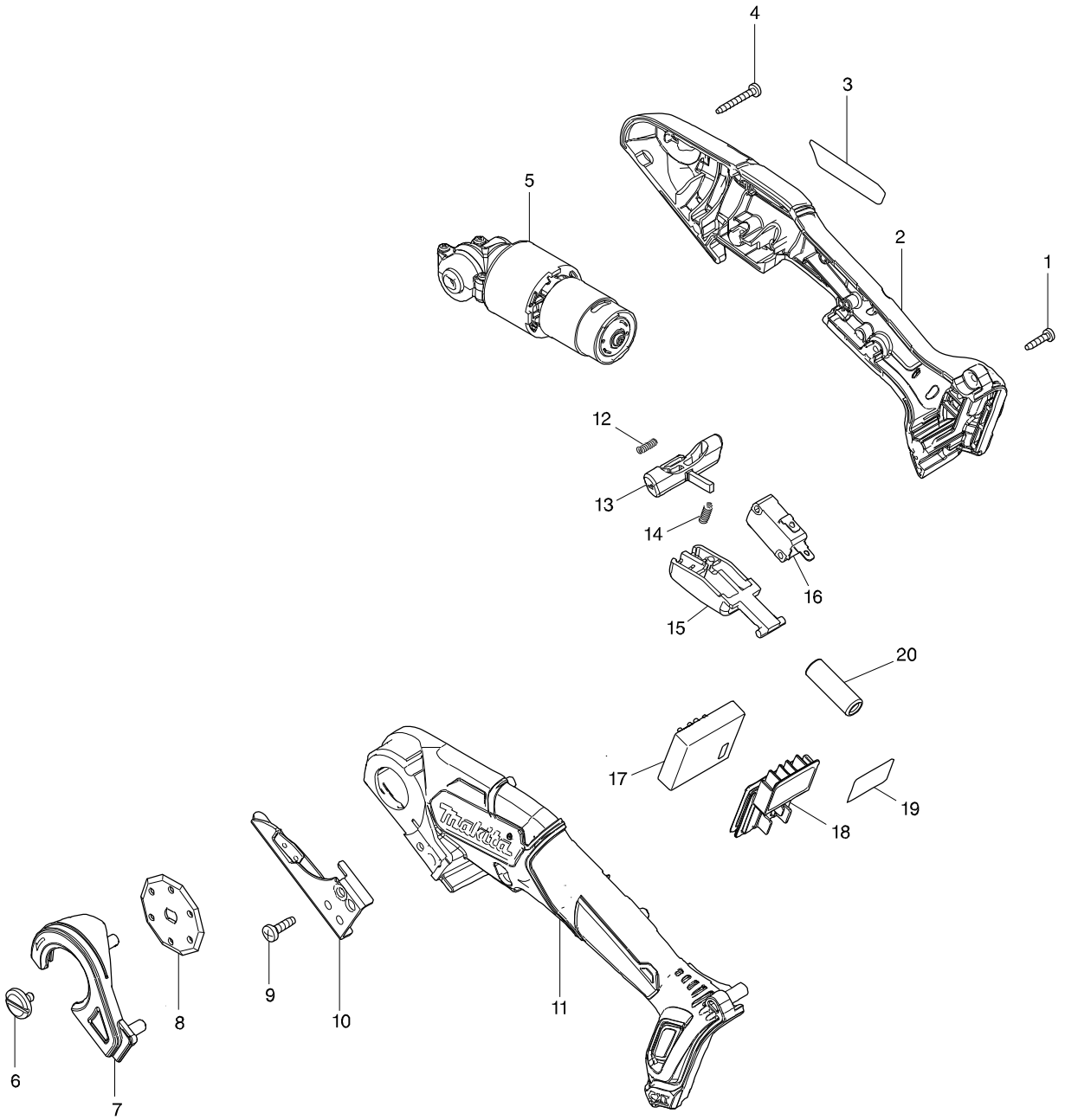

Číslo typu CP100D CORDLESS MULTI CUTTER

Položka	Číslo dílu	Popis	Změn	Množstv	N/O	Možnost 1	Možnost 2	Poznámka
001	266404-8	TAPPING SCREW BIND 3X14		6				
002	183G66-8	HOUSING SET		1				
D10		INC. 11						
003	853H53-4	CP100D NAME PLATE		1				
004	251574-6	TAPPING SCREW BIND 3X24		2				
005	126614-8	GEAR ASSEMBLY		1				
006	251571-2	- FLAT HEAD SCREW M4X8		1				
007	457828-1	BLADE COVER		1				
008	198603-3	MULTI CUTTER BLADE SET		1				
009	266385-6	TAPPING SCREW 4X14		1				
010	144620-1	UNDER BLADE COMPLETE		1				
011	183G66-8	HOUSING SET		1				
D10		INC. 2						
012	231469-9	COMPRESSION SPRING 4		1				
013	457829-9	LOCKOFF LEVER		1				
014	233438-6	COMPRESSION SPRING 4		1				
015	457830-4	SWITCH LEVER		1				
016	650744-8	SWITCH D3V-16-3C26		1				
017	620687-8	CONTROLLER		1				
018	644813-5	TERMINAL		1				
019	853H60-7	CP100D SERIAL NO. LABEL		1				
020	688165-4	LINE FILTER		1				
A01B	***DC10WC	DC10WC BATTERY CHARGER		1				
D10		COMPO-PARTS						
A02B	197394-3	BATTERY BL1020B SET		1				
A03B	198589-1	TOOL BAG SET		1				