Číslo typu CL183D CORDLESS CLEANER

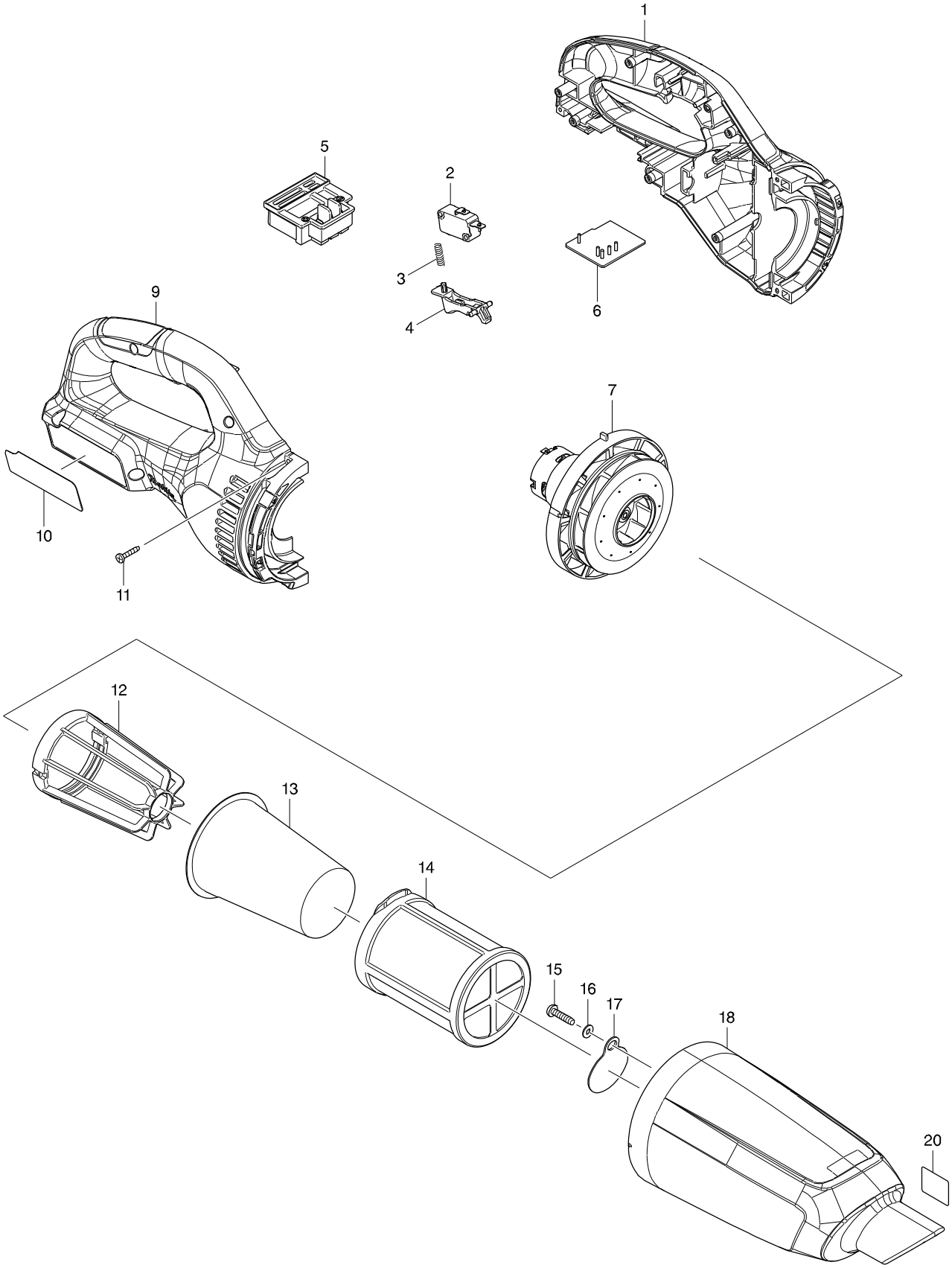

Číslo typu CL183D CORDLESS CLEANER

Položka	Číslo dílu	Popis	Změn	Množstv	N/O	Možnost 1	Možnost 2	Poznámka
001	183A61-2	HOUSING SET		1				
D10		INC. 9						
002	650744-8	SWITCH D3V-16-3C26		1				
003	231473-8	COMPRESSION SPRING 4		1				
004	455743-3	SWITCH LEVER		1				
005	643862-9	TERMINAL		1				
006	632E23-6	CONTROLLER UNIT		1				
C10	688172-7	LINE FILTER		2				
007	123424-4	MOTOR ASS'Y		1				
009	183A61-2	HOUSING SET		1				
D10		INC. 1						
010	850T07-4	CL183D NAME PLATE		1				
011	266429-2	TAPPING SCREW 3X16		7				
012	410237-5	STAY		1	*			
012-1	458467-0	STAY	O	1				
013	443060-3	FILTER		1				
014	451208-3	PRE-FILTER		1				
015	265995-6	TAPPING SCREW 4X18		1				
016	941051-3	FLAT WASHER 4		1				
017	424208-6	VALVE		1				
018	455601-3	CAPSULE		1				
020	809293-4	INDICATION LABEL		1				
A01	123283-6	NOZZLE ASSEMBLY		1	*			
A01-1	123485-4	NOZZLE ASSEMBLY	<	1				
C10	451410-8	ROLLER		4				
C20	268208-4	PIN 3		4				
C30	424096-1	WIPER		1				
A02	416041-0	SASH NOZZLE (IVORY)		1				
A03	416043-6	SASH NOZZLE HOLDER (IVORY)		1				
A04	451424-7	PIPE		1				
E02	632H46-2	FUSE UNIT		1				