Číslo typu M6002 10MM DRILL

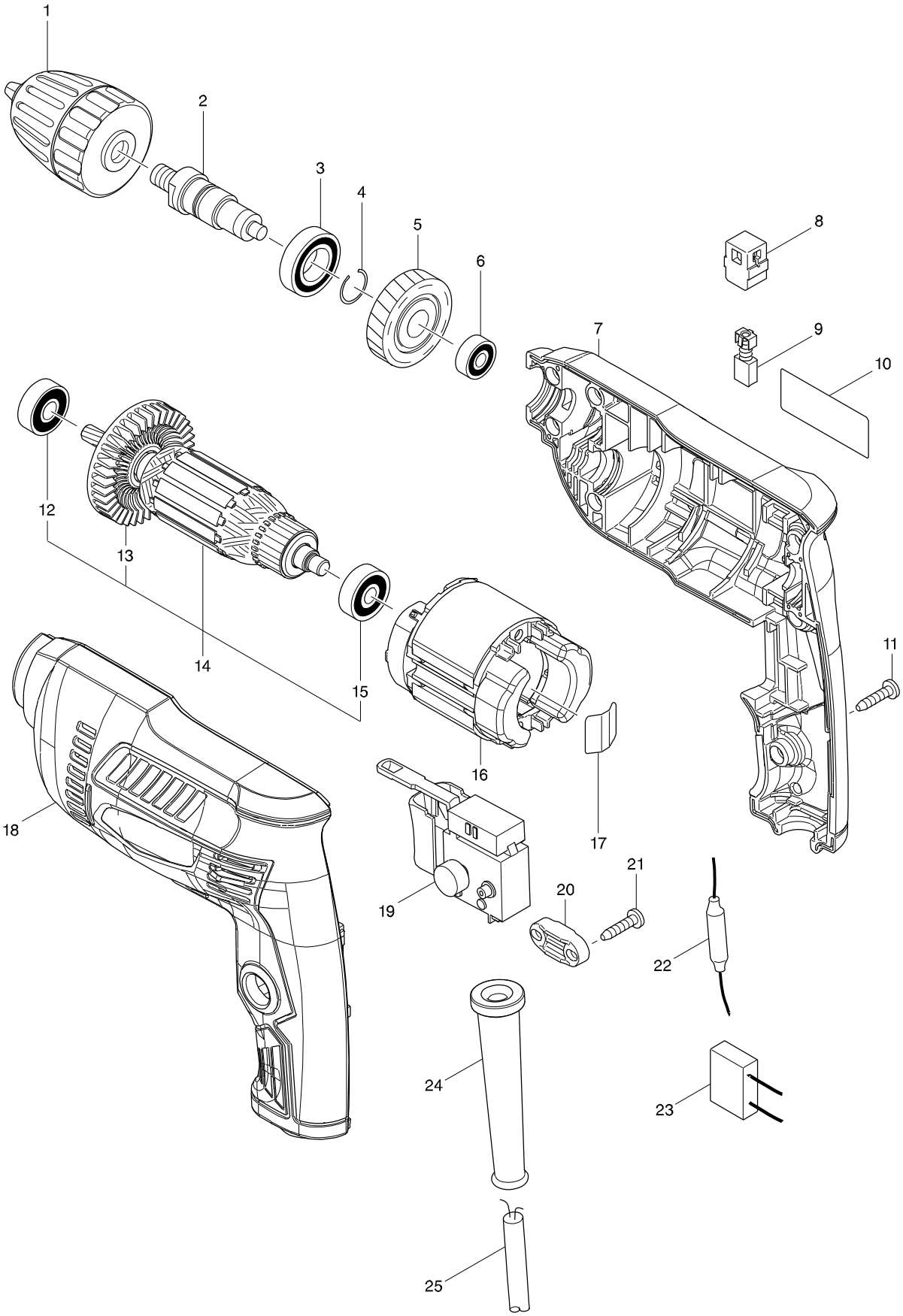

Číslo typu M6002 10MM DRILL

Položka	Číslo dílu	Popis	Změn	Množstv	N/O	Možnost 1	Možnost 2	Poznámka
001	766026-9	KEYLESS DRILL CHUCK 10		1				
002	324376-4	SPINDLE		1				
003	211242-3	BALL BEARING 6902ZZ		1	*			
003-1	210153-9	BALL BEARING 6902ZZ	O	1				
004	233925-5	RING SPRING 13		1				
005	226578-7	HELICAL GEAR 35		1				
006	210028-2	BALL BEARING 606ZZ		1	*			
006-1	210137-7	BALL BEARING 606ZZ	O	1				
007	183B08-2	HOUSING SET		1	*			
D10		INC. 18			*			
007-1	183B95-1	HOUSING SET	<	1	*			
D10		INC. 18			*			
007-2	183D53-9	HOUSING SET	<	1				
D10		INC. 18						
008	643566-3	BRUSH HOLDER 5X8		2				
009	191998-3	CARBON BRUSH CB-85		1				
010	850X32-9	M6002 NAME PLATE		1				
011	266326-2	TAPPING SCREW 4X18		7				
012	210029-0	BALL BEARING 608ZZ		1	*			
012-1	210046-0	BALL BEARING 608ZZ	O	1				
013	240066-0	FAN 52		1				
014	515849-0	ARMATURE ASS'Y 240V		1				
D10		INC. 12,13,15						
015	210030-5	BALL BEARING 627ZZ		1	*			
015-1	210050-9	BALL BEARING 627ZZ	O	1				
016	639358-6	FIELD 240V		1				
017	232210-3	LEAF SPRING		1				
018	183B08-2	HOUSING SET		1	*			
D10		INC. 7			*			
018-1	183B95-1	HOUSING SET	<	1	*			
D10		INC. 7			*			
018-2	183D53-9	HOUSING SET	<	1				
D10		INC. 7						
019	650551-9	SWITCH FA1-3/2BEZ-4		1				
020	687124-5	STRAIN RELIEF		1				
021	266326-2	TAPPING SCREW 4X18		2				
022	646147-2	CHOKE COIL		1				
023	645190-8	NOISE SUPPRESSOR		1				
024	682569-2	CORD GUARD 8-85		1				
025	665383-1	POWER SUPPLY CORD 1.0-2-2.0		1	*			
025-1	695556-2	POWER SUPPLY CORD 1.0-2-2.0	O	1				