DE	GERMANY

Diagram / Parts List

SK700D

RECHARGEBLE MULTI LINE LASESR

2021/11

(DE) SK700D / RECHARGEBLE MULTI LINE LASESR

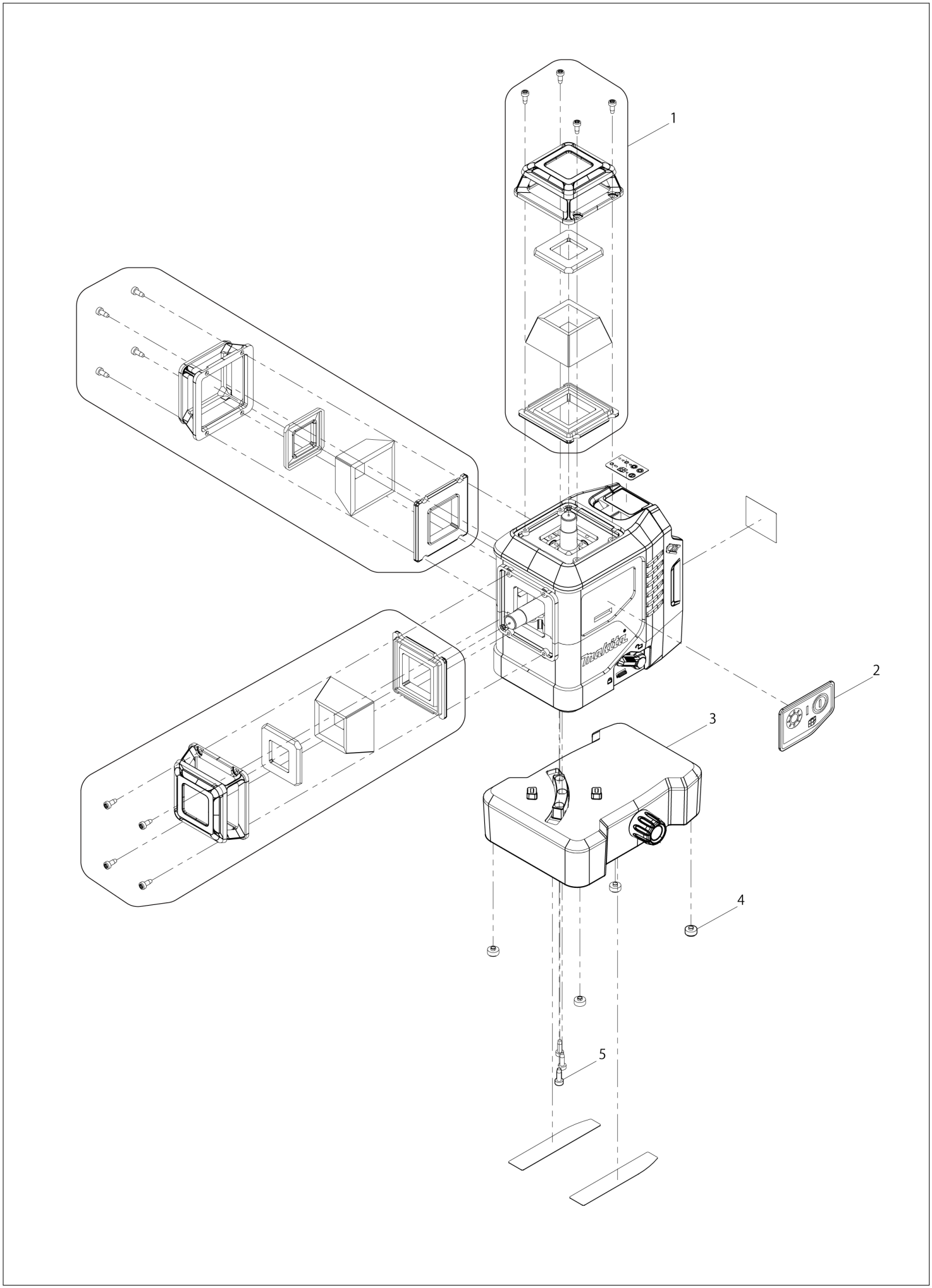

DE	GERMANY

SK700D / RECHARGEBLE MULTI LINE LASESR

Item	Sub	Parts No.	Parts Description	Qty	I/C	E/C No.	Close No.	Remark
001		LE00931036	LASER PROTECTION CAGE	3				
002		LE00919242	KEY PAD(RED)	1			Y08737	
003		LE00931039	ROTATING BASE	1				
004		LE00931038	RUBBER FEET(4PCS.)	1				
005		LE00947148	PAN HEAD SCREW ST2.5X8(10PCS)	1				
A01		LE00929103	HOLSTER	1		Y08768		
A02		LE00929104	L-ADAPTER	1		Y08768		
A03		LE00758831	TARGET PLATE RED	1		Y08768		

Interchange
O : Yes
X : No
< : the new part can be substituted for the current.
> : the current part can be substituted for the new.
S : Interchangeable as a set.