DE

Diagram / Parts List

SK106D

CRDLSS RED 4P CROSS LINE LASER

2019/12

(DE) SK106D / CRDLSS RED 4P CROSS LINE LASER

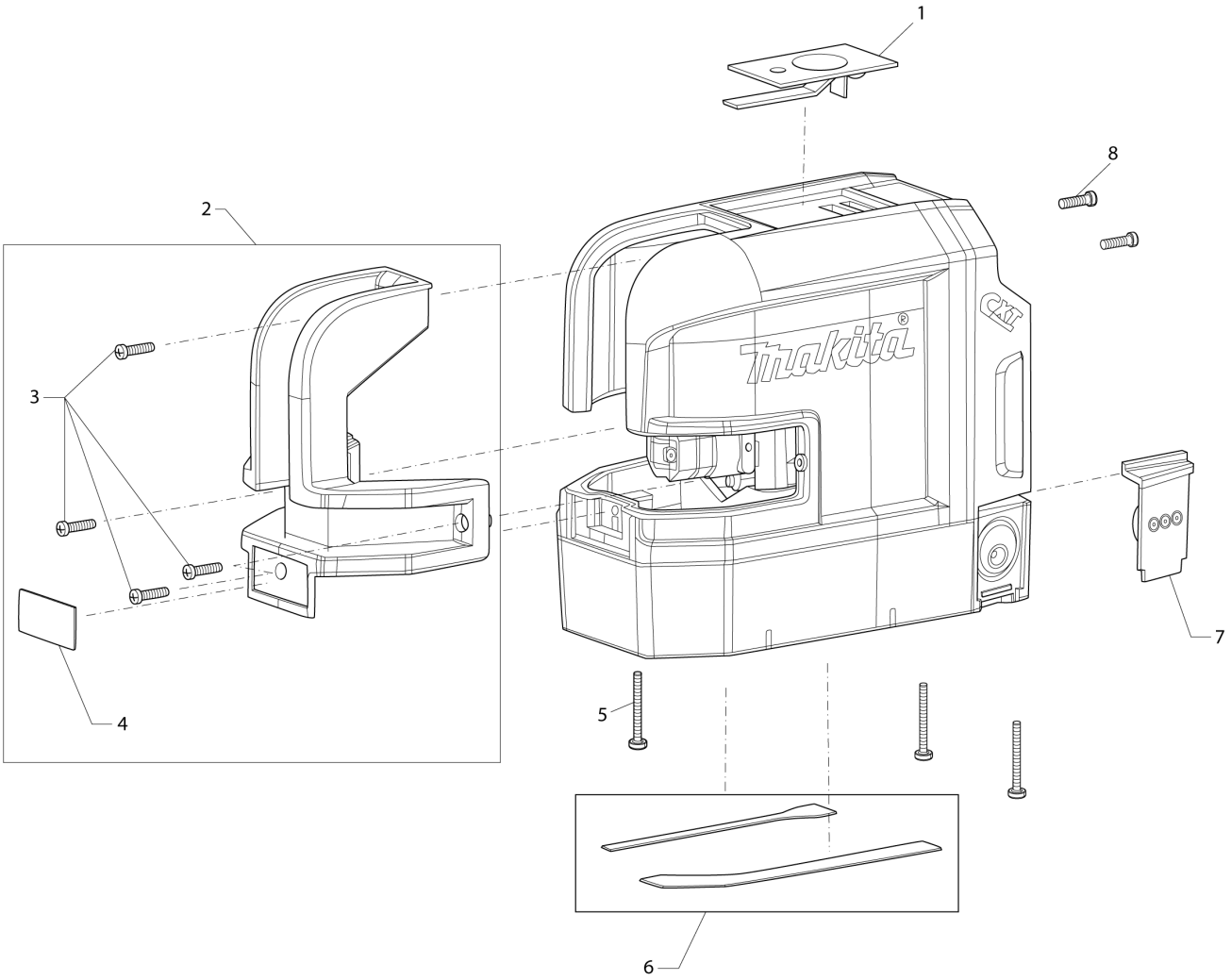

DE	GERMANY

SK106D / CRDLSS RED 4P CROSS LINE LASER

Item	Sub	Parts No.	Parts Description	Qty	I/C	E/C No.	Close No.	Remark
001		LE00099151	KEYPAD RED	1			Y08103	
001-1		LE00899151	KEYPAD RED	1	X	Y08103		
002		LE00870264	WINDOW FRAME SET.(SK106D)	1				
	D10		INC. 3,4					
003		LE00899157	SCREW(10PCS.)	1				
004		LE00855686	FRONT LABEL(SK106D)	1				
005		LE00899156	SCREW FOR BOTTOM HOUSING(10P)	1				
006		LE00870260	BASE LABEL SET	1				
007		LE00873680	DC JACK COVER	1				
008		LE00899157	SCREW(10PCS.)	1				
A01		LE00854451	PRO L-ADAPTER	1			Y08119	
A01-1		LE00870134	PRO L-ADAPTER	1	<	Y08119		
A02		LE00864505	HOLSTER	1		Y08121		
A03		LE00758831	TARGET PLATE RED	1		Y08121		
A04		LE00834534	GLASSES LASER VISIBILITY	1		Y08121		

Interchange
O : Yes
X : No
< : the new part can be substituted for the current.
> : the current part can be substituted for the new.
S : Interchangeable as a set.